CMOS Inverter and Voltage Transfer Characteristics (VTC)

[A detailed VLSI - level study of CMOS inverter operation, switching characteristics, and Voltage Transfer Characteristics (VTC) using LTspice simulation.]

Overview:

This Project the design, simulation, and analysis of a COS inverter, one of the most fundamental components in digital electronics ad VLSI systems. The inverter is implemented using complementary MOS transistors (PMOS & NMOS) and analyzed through:

Transient Analysis - Time domain switching behaviour

DC Sweep Analysis - Voltage Transfer Characteristics (VTC)

The objective is to evaluate switching performance, threshold voltage, andnoie immunity.

Introduction :

As the fundamental building block of modern digital logic, the CMOS inverter is essential for high-performance, low-power integrated circuits. Its complementary switching architecture ensures that one transistor is always off when the other is conducting, virtually eliminating static power consumption. This design provides a full rail-to-rail voltage swing and high noise immunity, making it the industry

standard for microprocessors and memory circuits where reliability and energy efficiency are paramount.

1. Low static power consumption
2. Full voltage swing (0 to VDD)
3. High noise immunity

CMOS Inverter Architecture :

The CMOS inverter architecture is a study in efficiency, utilizing a complementary pair of transistors to control signal flow. The PMOS transistor acts as the “pull-up” network, connecting the output to VDD, while the NMOS transistor serves as the “pull-down” network, linking it to ground. By applying a common input to both gates, the circuit ensures that only one path is active at a time. This results in a clean output taken from the shared drain node, providing the reliable rail - to - rail voltage swings necessary for modern digital logic.

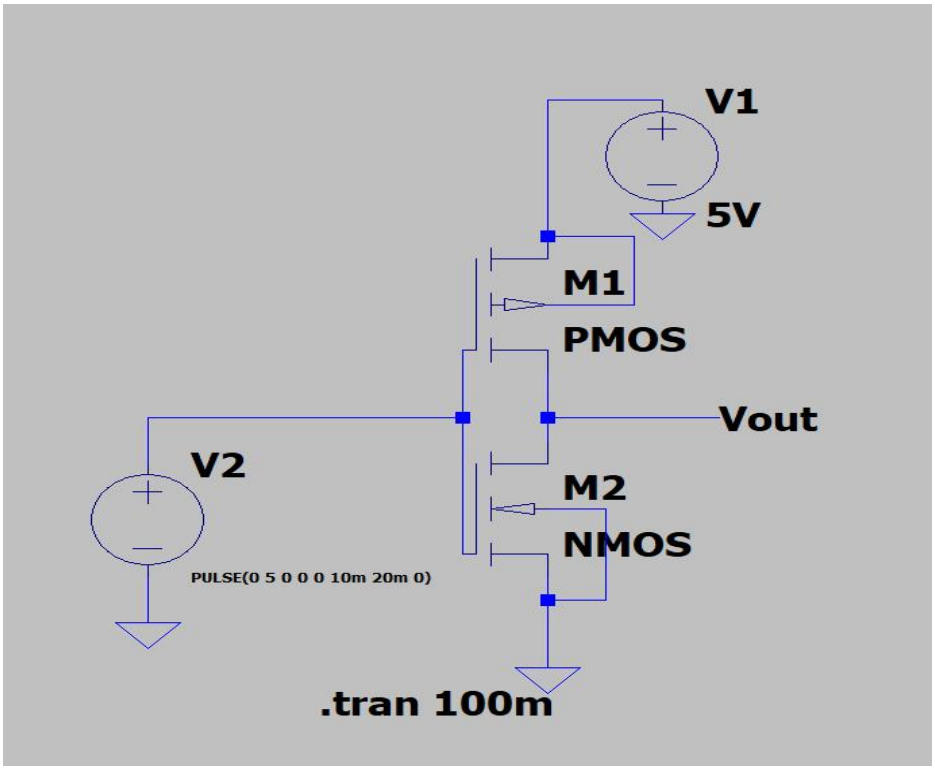

CMOS Inverter Circuit

Theory of Operation :

The CMOS inverter operates through a highly efficient push-pull mechanism, transitioning through three distinct phase:

1. Logic Low State (Vin = VDD) : The PMOS is fully engaged (ON) while the NMOS remains inactive (OFF). This create a direct path to the supply voltage, pulling the output HIGH (VDD).
2. Logic High State (Vin =VDD) : The roles reverse; the PMOS shuts off and the NMOS engages, driving the output to a clean LOW (0V).
3. Transition Phase : As the input crosses the switching threshold, both transistors are momentarily active. This create a high-gain region where the output switches rapidly, ensuring the sharp, decisive transitions required for high-speed digital processing.

Simulation Methodology :

Transient Analysis : By applying a pulse waveform (0V to 5V), I observed the circuits real time switching dynamics. Using a (.tran 10ms) command, I was able to evaluate how the inverter responds to rapid input changes over time.

DC Sweep Analysis : To understand the steady state behavior, I swept the input voltage from 0V to 5V using a (.dc) command with 0.01V increments. This generated the Voltage Transfer Characteristic (VTC) curve, allowing for a precise measurement of noise margins and the switching threshold.

Result & Analysis :

1. Transient Response of CMOS Inverter showing input (Vin) and output (Vout) waveform

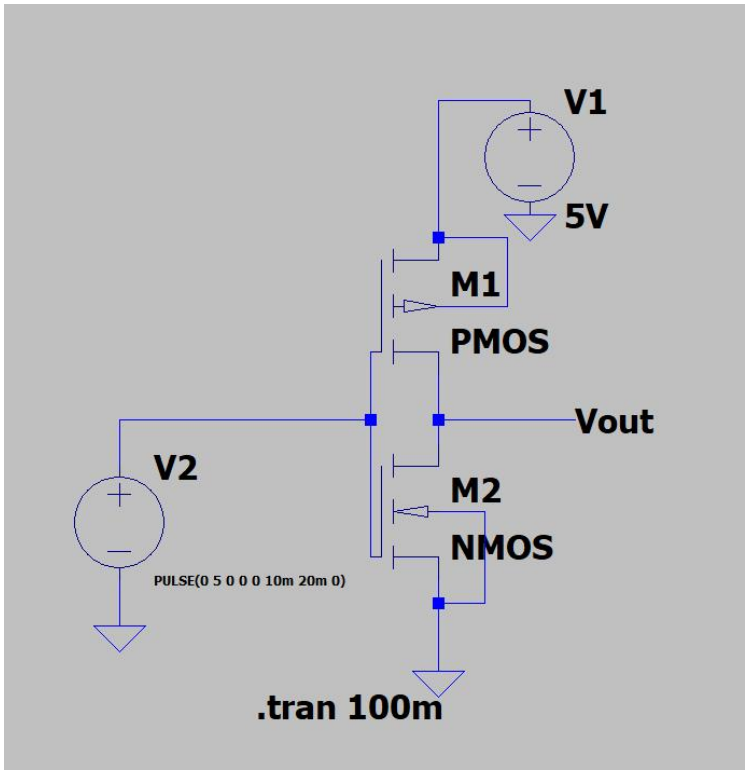

Transient Response of CMOS Inverter showing input (Vin)

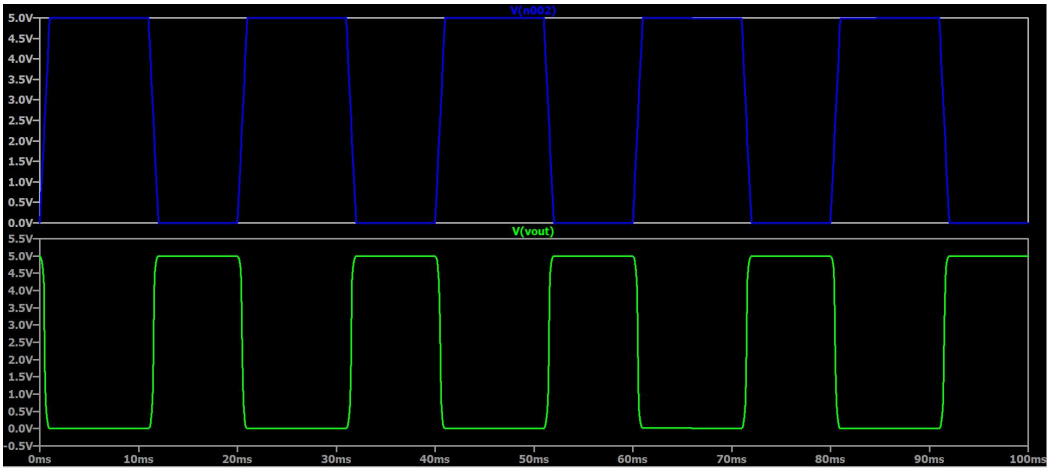

Transient Response of CMOS Inverter showing output (Vout)

Explanation : The above waveform captures the transient dynamics of the CMOS inverter, highlighting the relationship between the pulsed input (Vin) and its inverted output (Vout). As the input toggles between 0V and VDD, the output responds predictably: a low input engages the PMOS to hold the output high, while a high input activates the NMOS to drive the output to ground. Beyond confirming basic logical inversion, the simulation reveals the impact of parasitic capacitance's, which manifest as a slight propagation delay - a critical factor in determining the overall speed and timing constraints of the circuit.

2. Voltage Transfer Characteristics (VTC)

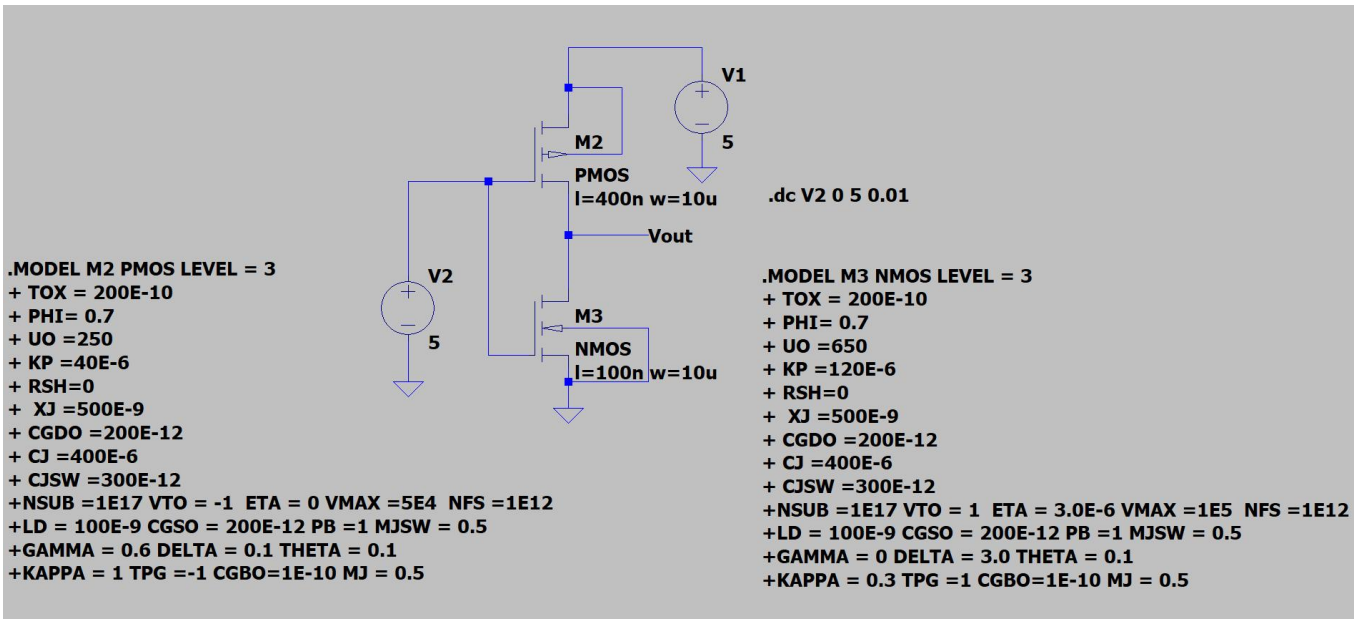

Voltage Transfer Characteristics (VTC) of CMOS Inverter (Vin)

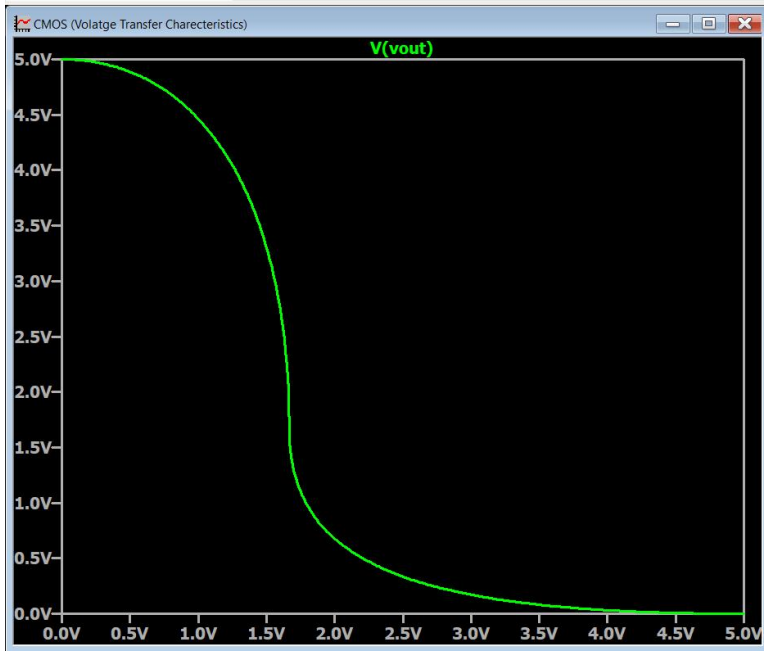

Voltage Transfer Characteristics (VTC) of CMOS Inverter (Vout)

Explanation : The Voltage Transfer Characteristics (VTC) curve visually defines the inverter's electrical performance, mapping the output voltage (Vout) against a varying input (Vin). The resulting "S-shaped" curve features a sharp transition, which signifies high gain and decisive switching. A key takeaway is the switching threshold (Vm), which is centered near the midpoint of the supply voltage - where Vin equals Vout - confirming a balanced design. This steep transition, combined with stable plateaus for logic HIGH and LOW states, ensures excellent noise immunity, allowing the inverter to maintain signal integrity even in electrically noisy environments.

Observations :

The simulation results confirm several critical performance metrics that validate the design's effectiveness:

1. **Logical Integrity** : The output maintains perfect logical inversion, demonstrating the circuit's reliability as a fundamental processing unit.
2. **Optimal Signal Swing** : The design achieves a full rail - to - rail voltage swing (0V to VDD), ensuring maximum dynamic range and compatibility with subsequent logic stages.

3. **Balanced Design** : The switching threshold (Vm) is precisely positioned near th mid supply voltage, confirming that the transistor geometries were accurately sized to balance PMOS and NMOS strength.

4. **High Gain Sensitivity** : A steep transition region indicates high gain, which facilities rapid state changes and minimizes the time spent in the high current intermediate state.

5. **Power Efficiency** : The characteristic behavior confirms minimal static power consumption, as current only flows significantly during the brief switching intervals.

Industrial and Research Applications:

The versatility of the CMOS inverter makes it the foundational architecture for nearly all modern electronic systems. Its primary applications include:

1. **VLSI and Microprocessors** : Serving as the fundamental cell for complex logic gates (NAND, NOR) and high density central processing units.

2. **Memory Architecture** : Integral to the design of SRAM (Static RAM) cells, where stable state-latching is required for data storage.

3. **Signal Conditionality** : Utilized in high - speed digital signal processing (DSP) systems to maintain signal integrity across long interconnects.

4. **Clock Distribution Networks** : Employed in buffer chains to drive heavy capacitive loads while maintaining sharp clock edges across an entire chip.

5. **Low - Power Electronics** : Preferred in battery-operated devices due to its near - zero static power consumption, extending the operational life of portable technology.

Project Structure :

```
CMOS-Inverter-LTspice

│
├── circuits
├── results
│   ├── circuit.png
│   ├── transient.png
```

```
│   └── vtc.png
├── models
├── report
└── README.md
```

Conclusion :

The design and analysis of this CMOS inverter underscore its role as the definitive standard for digital logic, characterized by high gain, efficient switching, and exceptional noise immunity. The VTC analysis confirms a robust capable of maintaining signal integrity within the complex environments of large scale VLSI systems. Ultimately, this project serves as a comprehensive validation of CMOS logic principles, providing the essential circuit-level insights required to develop more advanced, energy efficient integrated systems.

Submitted by:

MANNEM SHAMILI